2N3055
MJ2955

COMPLEMENTARY SILICON POWER TRANSISTORS

- STMicroelectronics PREFERRED SALESTYPES
- COMPLEMENTARY NPN-PNP DEVICES

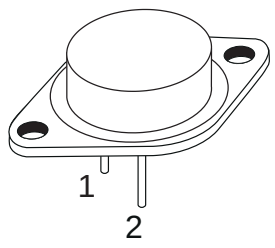

TO-3

DESCRIPTION

The 2N3055 is a silicon Epitaxial-Base Planar NPN transistor mounted in Jedec TO-3 metal case.

It is intended for power switching circuits, series and shunt regulators, output stages and high fidelity amplifiers.

The complementary PNP type is MJ2955.

INTERNAL SCHEMATIC DIAGRAM

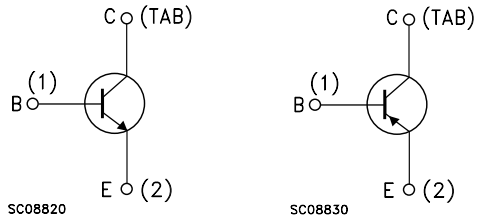

ABSOLUTE MAXIMUM RATINGS

Symbol	Parameter		Value	Unit
		NPN	2N3055	
		PNP	MJ2955	
V_{CBO}	Collector-Base Voltage (I_E = 0)		100	V
V_{CER}	Collector-Emitter Voltage ($R_{BE} \leq 100\Omega$)		70	V
V_{CEO}	Collector-Emitter Voltage (I_B = 0)		60	V
V_{EBO}	Emitter-Base Voltage (I_C = 0)		7	V
I_C	Collector Current		15	A
I_B	Base Current		7	A
P_{tot}	Total Dissipation at $T_c \leq 25\ ^oC$		115	W
T_{stg}	Storage Temperature		-65 to 200	^oC
T_j	Max. Operating Junction Temperature		200	^oC

For PNP types voltage and current values are negative.

THERMAL DATA

$R_{thj-case}$	Thermal Resistance Junction-case	Max	1.5	$^oC/W$

ELECTRICAL CHARACTERISTICS (T_{case} = 25 ^oC unless otherwise specified)

Symbol	Parameter	Test Conditions	Min.	Typ.	Max.	Unit
I_{CEX}	Collector Cut-off Current (V_{BE} = -1.5V)	V_{CE} = 100 V V_{CE} = 100 V T_j = 150 ^oC			1 5	mA mA
I_{CEO}	Collector Cut-off Current (I_B = 0)	V_{CE} = 30 V			0.7	mA
I_{EBO}	Emitter Cut-off Current (I_C = 0)	V_{EB} = 7 V			5	mA
$V_{CEO(sus)}$*	Collector-Emitter Sustaining Voltage (I_B = 0)	I_C = 200 mA	60			V
$V_{CER(sus)}$*	Collector-Emitter Sustaining Voltage (R_{BE} = 100 Ω)	I_C = 200 mA	70			V
$V_{CE(sat)}$*	Collector-Emitter Saturation Voltage	I_C = 4 A I_B = 400 mA I_C = 10 A I_B = 3.3 A			1 3	V V
V_{BE}*	Base-Emitter Voltage	I_C = 4 A V_{CE} = 4 A			1.8	V
h_{FE}*	DC Current Gain	I_C = 4 A V_{CE} = 4 A I_C = 10 A V_{CE} = 4 A	20 5		70	
f_T	Transition frequency	I_C = 0.5 A V_{CE} = 10 V	3			MHz
$I_{s/b}$*	Second Breakdown Collector Current	V_{CE} = 40 V	2.87			A

* Pulsed: Pulse duration = 300 µs, duty cycle 1.5 %
For PNP types voltage and current values are negative.

TO-3 MECHANICAL DATA

DIM.	mm			inch		
	MIN.	TYP.	MAX.	MIN.	TYP.	MAX.
A	11.00		13.10	0.433		0.516
B	0.97		1.15	0.038		0.045
C	1.50		1.65	0.059		0.065
D	8.32		8.92	0.327		0.351
E	19.00		20.00	0.748		0.787
G	10.70		11.10	0.421		0.437
N	16.50		17.20	0.649		0.677
P	25.00		26.00	0.984		1.023
R	4.00		4.09	0.157		0.161
U	38.50		39.30	1.515		1.547
V	30.00		30.30	1.187		1.193

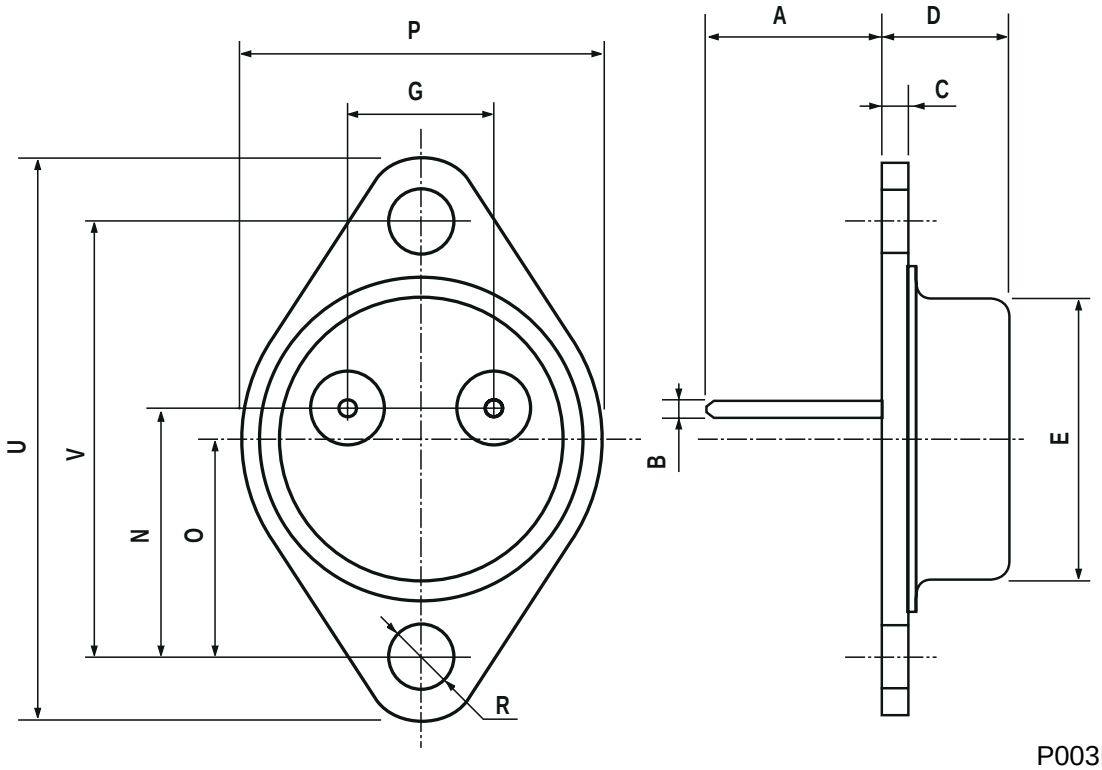

P003F